CRFTSTRUT0007_253mm

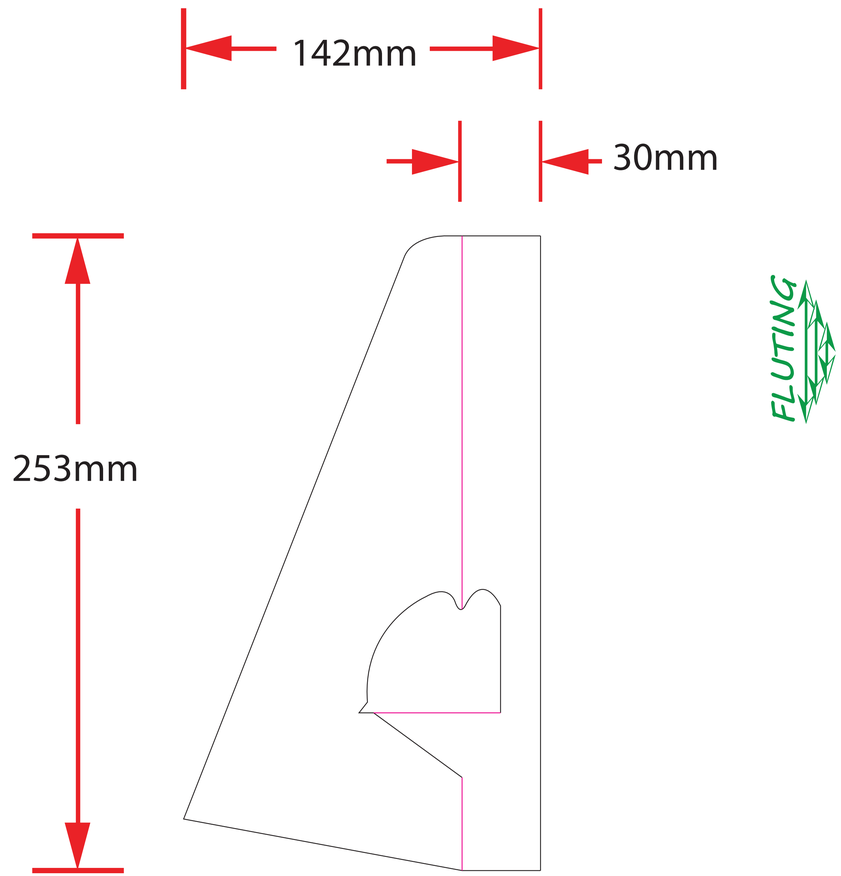

PRINT SIDE

quote drawing only do not use for sample or production

CRAFTECH
SCREEN ▪ DIGITAL ▪ DISPLAY

CLIENT: CRAFTECH		BOARD GRADE: 0.5-2mm	PRINT REQUIREMENTS: DIGITAL, SCREEN, 1,2,3,4 COLOUR, SPECIALS, PMS	CUT LINE / MITER LINE / CREASE LINE / GLUE	CUTTING TIME
DESCRIPTION: CRFTSTRUT0007_253mm		CUT RULE: CUT RULE mm			
JOB NUMBER: JOB NUMBER	DATE: 00/00/2000	CREASE RULE: CREASE RULE mmm			

CRFTSTRUT0009_690mm

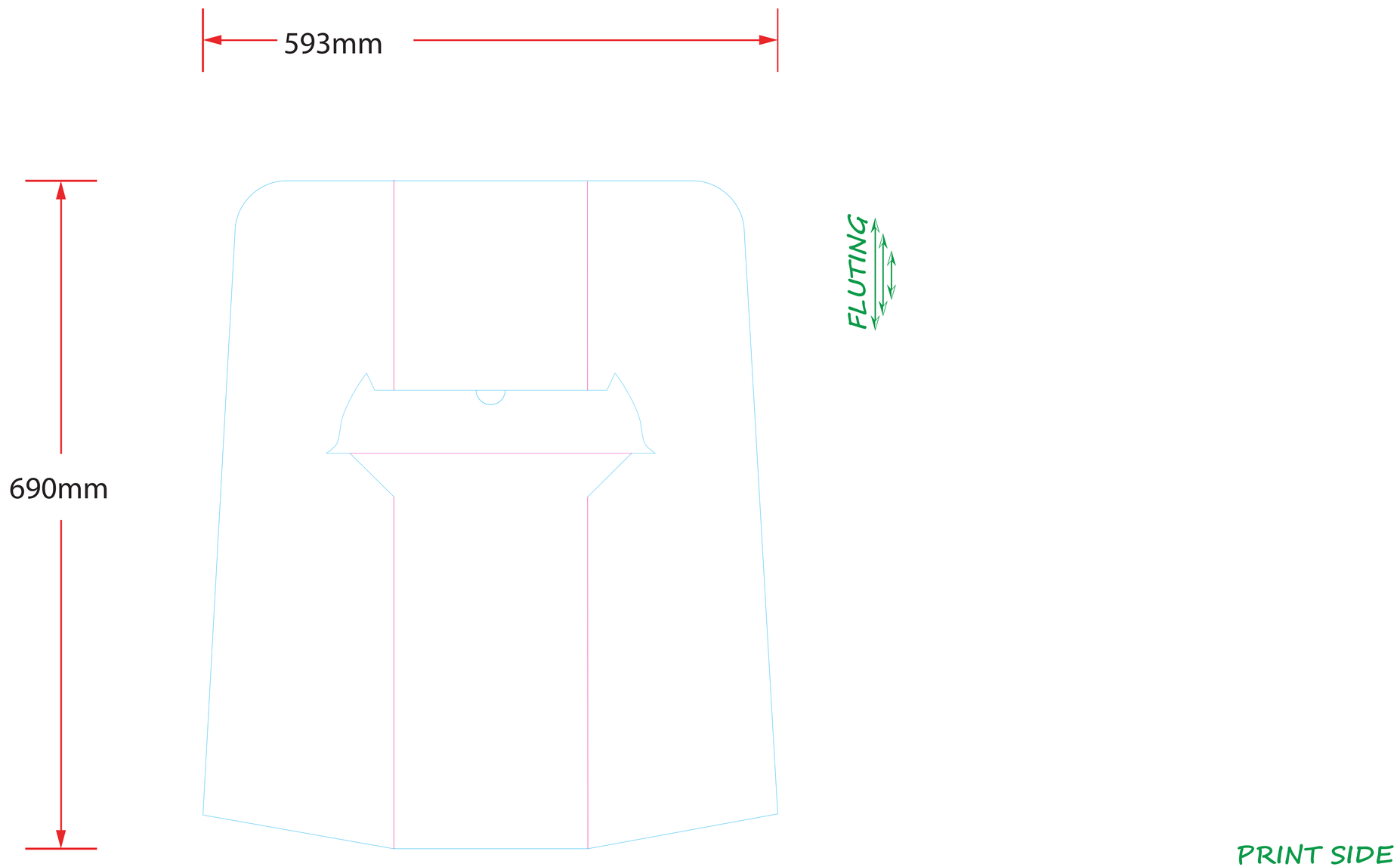

quote drawing only do not use for sample or production

CRAFTECH

SCREEN ▪ DIGITAL ▪ DISPLAY

CLIENT: CRAFTECH		BOARD GRADE: 0.5-2mm	
DESCRIPTION: CRFTSTRUT0009_690mm		CUT RULE: CUT RULE mm	
JOB NUMBER: JOB NUMBER	DATE: 00/00/2000	CREASE RULE: CREASE RULE mmm	

PRINT REQUIREMENTS
DIGITAL
SCREEN
1,2,3,4 COLOUR
SPECIALS
PMS

CUT LINE
MITER LINE
CREASE LINE
GLUE

CUTTING TIME

CRFTSTRUT0004_800mm
(6487_POP_strutt)

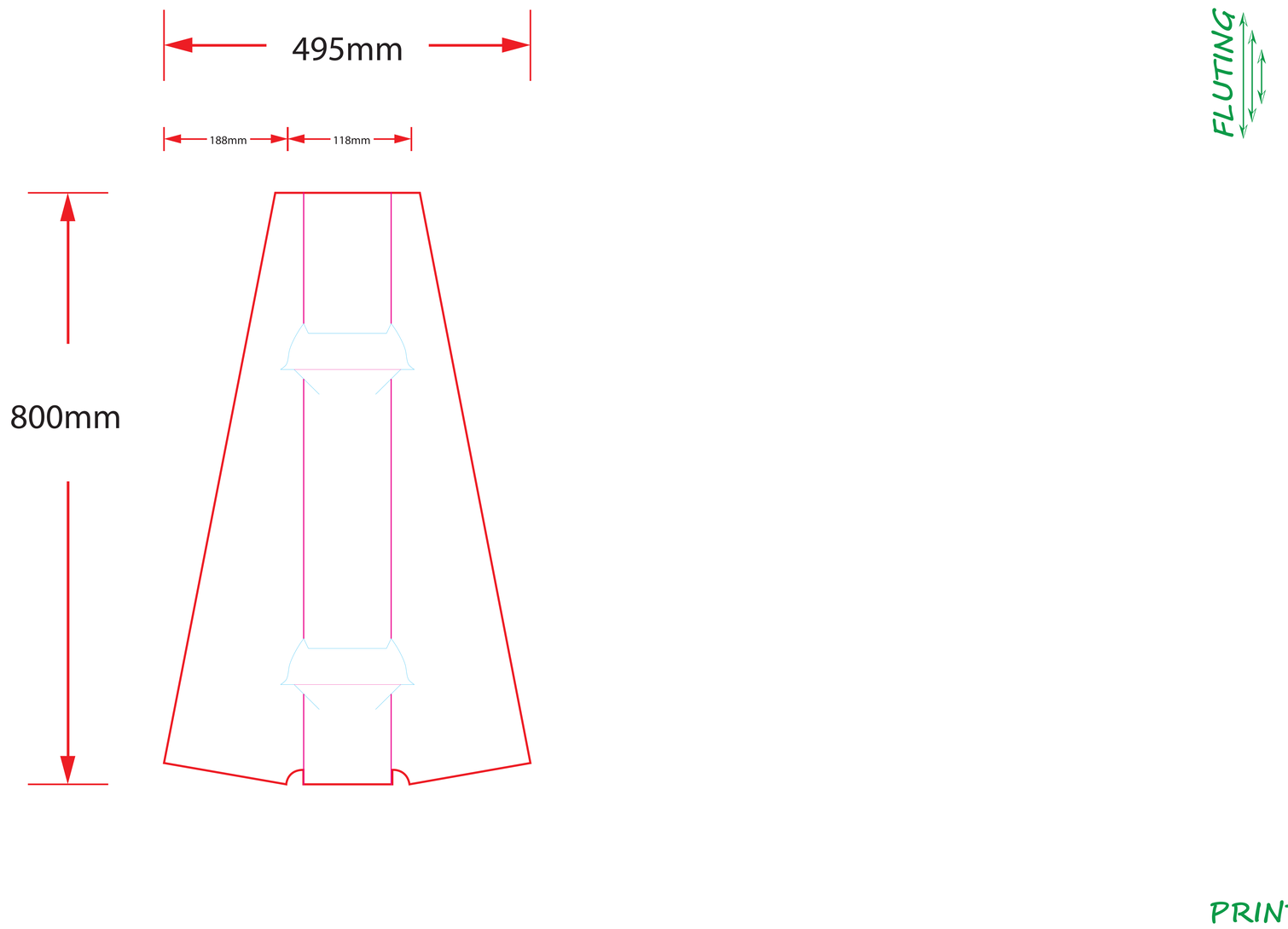

quote drawing only do not use for sample or production

CRAFTECH
SCREEN ▪ DIGITAL ▪ DISPLAY

CLIENT: CRAFTECH		BOARD GRADE: BOARD GRADE	
DESCRIPTION: CRFTSTRUT0004_800mm		CUT RULE: CUT RULE mm	
JOB NUMBER: JOB NUMBER	DATE: 00/00/2000	CREASE RULE: CREASE RULE mmm	

PRINT REQUIREMENTS
DIGITAL
SCREEN
1,2,3,4 COLOUR
SPECIALS
PMS

CUT LINE
MITER LINE
CREASE LINE
GLUE

CUTTING TIME

CRFTSTRUT0008_1064mm

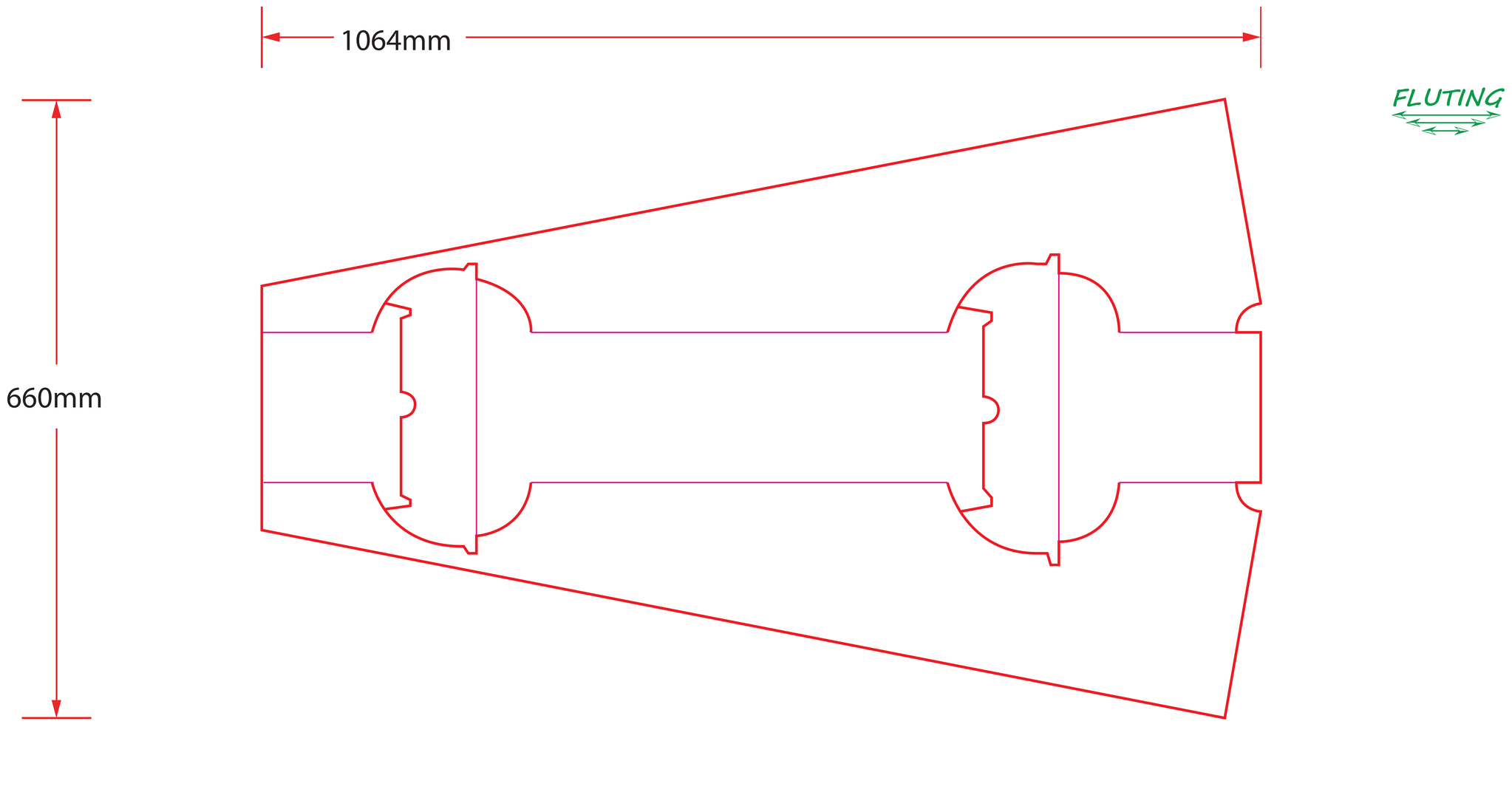

quote drawing only do not use for sample or production

CRAFTECH
SCREEN ▪ DIGITAL ▪ DISPLAY

CLIENT: CRAFTECH		BOARD GRADE: 0.5-2mm	
DESCRIPTION: CRFTSTRUT0008_1064mm		CUT RULE: CUT RULE mm	
JOB NUMBER: JOB NUMBER	DATE: 00/00/2000	CREASE RULE: CREASE RULE mmm	

PRINT REQUIREMENTS
DIGITAL
SCREEN
1,2,3,4 COLOUR
SPECIALS
PMS

CUT LINE
MITER LINE
CREASE LINE
GLUE

CUTTING TIME

CRFTSTRUT0016_1050mm

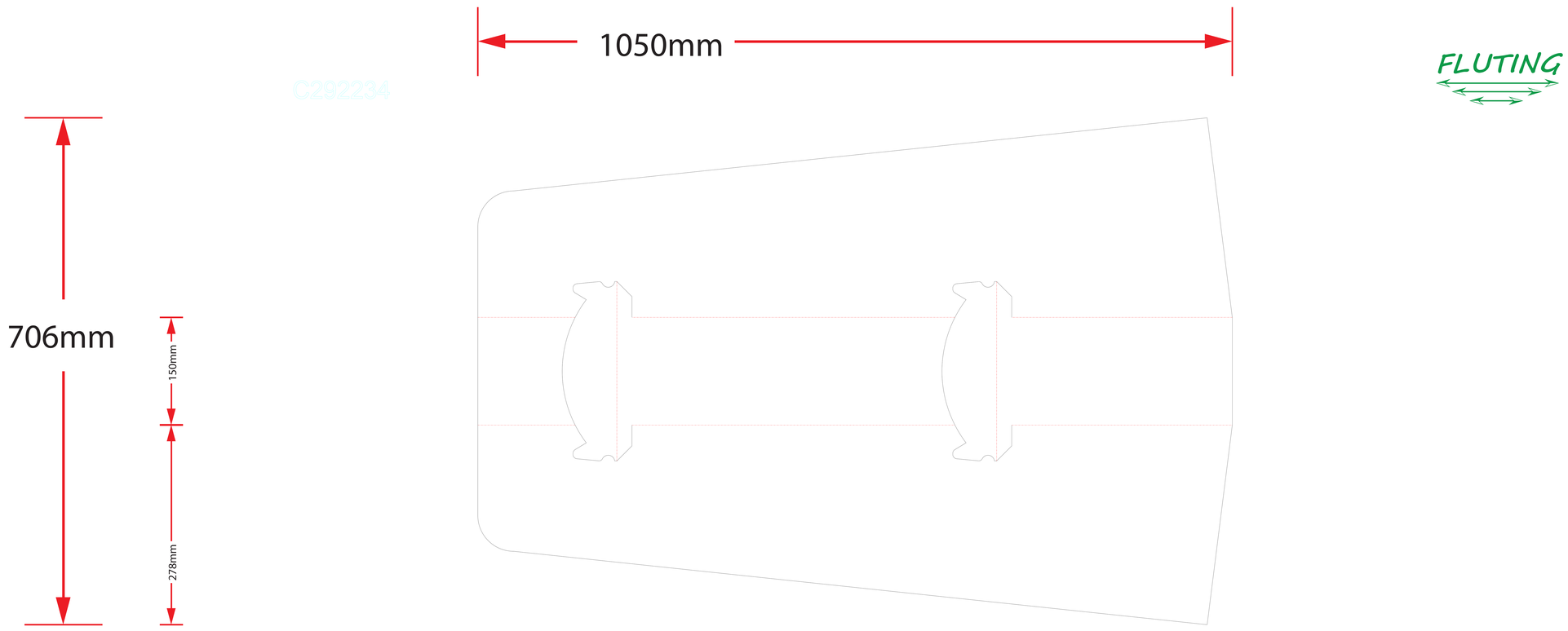

PRINT SIDE

quote drawing only do not use for sample or production

CRAFTECH
SCREEN ▪ DIGITAL ▪ DISPLAY

CLIENT: CRAFTECH		BOARD GRADE: 3mm	
DESCRIPTION		CUT RULE: CUT RULE mm	
JOB NUMBER: JOB NUMBER	DATE: 00/00/2000	CREASE RULE: CREASE RULE mmm	

PRINT REQUIREMENTS
DIGITAL
SCREEN
1,2,3,4 COLOUR
SPECIALS
PMS

CUT LINE
MITER LINE
CREASE LINE
GLUE

CUTTING TIME

CRFTSTRUT0002_1215mm

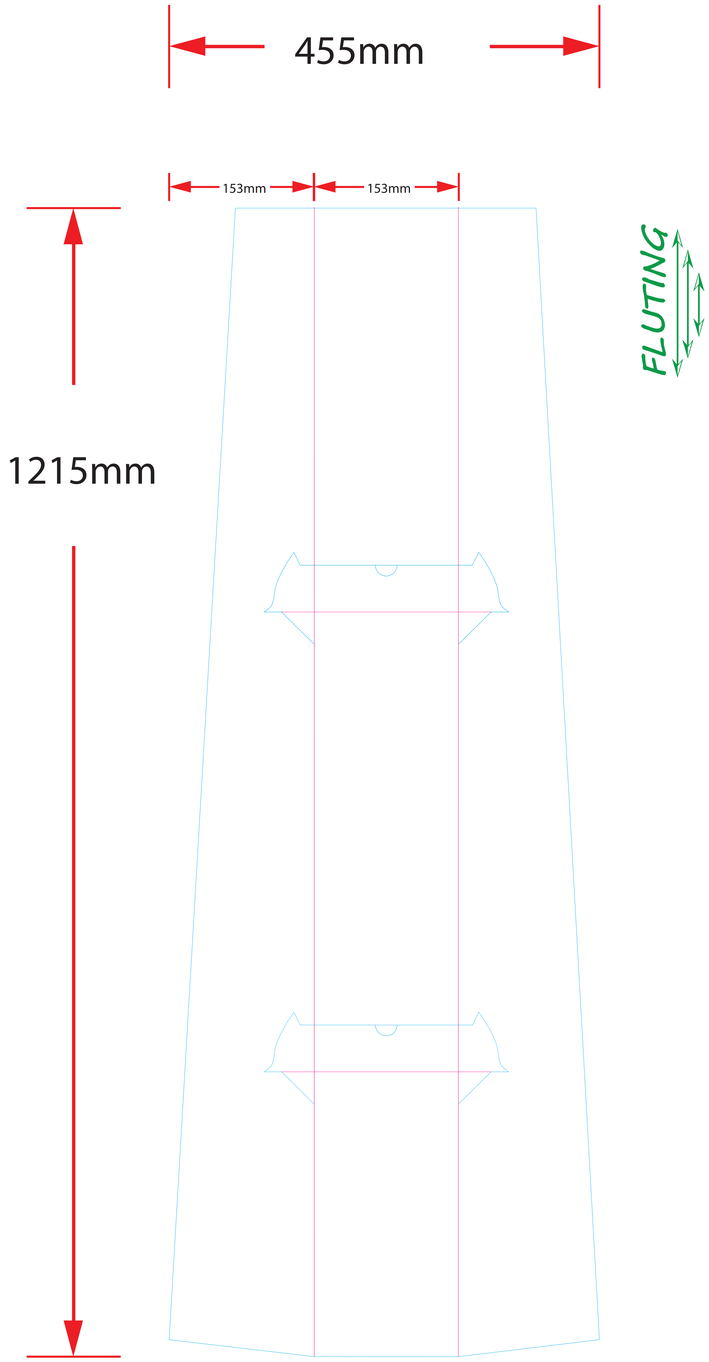

PRINT SIDE

quote drawing only do not use for sample or production

CRAFTECH
SCREEN ▪ DIGITAL ▪ DISPLAY

CLIENT: CLIENT NAME		BOARD GRADE: BOARD GRADE	
DESCRIPTION: DESCRIPTION OF DISPAY		CUT RULE: CUT RULE mm	
JOB NUMBER: JOB NUMBER	DATE: 00/00/2000	CREASE RULE: CREASE RULE mmm	

PRINT REQUIREMENTS
DIGITAL
SCREEN
1,2,3,4 COLOUR
SPECIALS
PMS

CUT LINE
MITER LINE
CREASE LINE
GLUE

CUTTING TIME

STRUT - CRFTSTRUT0001

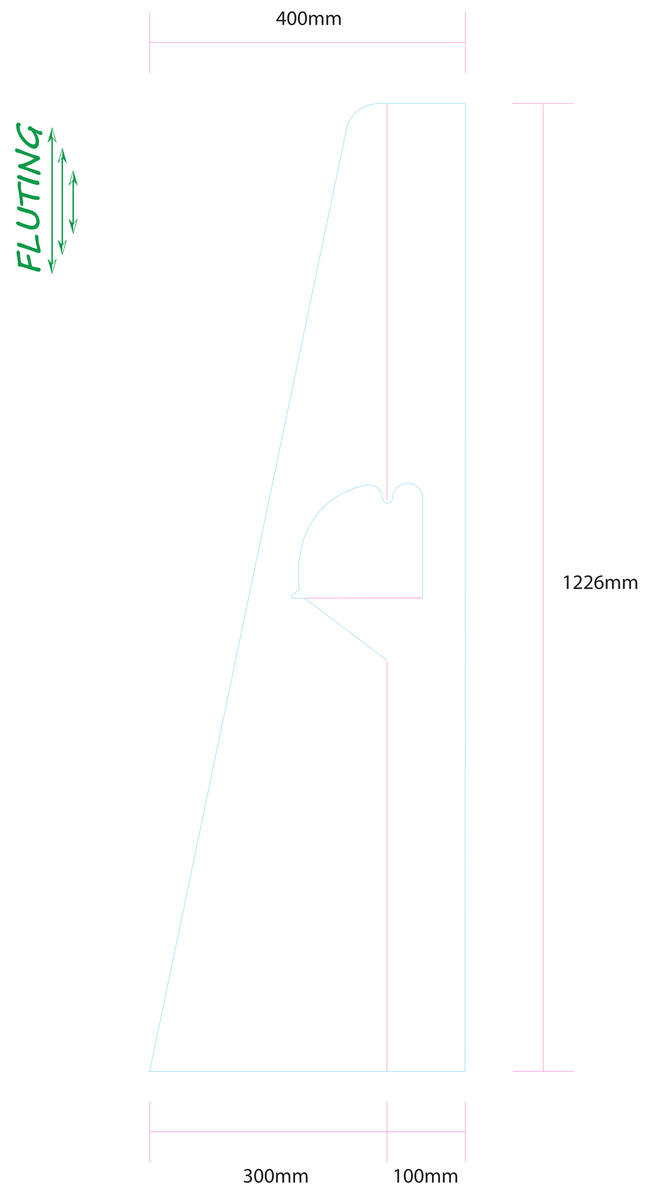

PRINT SIDE

quote drawing only do not use for sample or production

CRAFTECH
SCREEN ▪ DIGITAL ▪ DISPLAY

CLIENT: CRAFTECH		BOARD GRADE: 5mm board	
DESCRIPTION: SINGLE STRUT -CRFTSTRUT0001		CUT RULE: CUT RULE mm	
JOB NUMBER: JOB NUMBER	DATE: 00/00/2000	CREASE RULE: CREASE RULE mmm	

PRINT REQUIREMENTS
DIGITAL
SCREEN
1,2,3,4 COLOUR
SPECIALS
PMS

CUT LINE
MITER LINE
CREASE LINE
GLUE

CUTTING TIME

CRFTSTRUT0010_2 piece_1150_1620mm

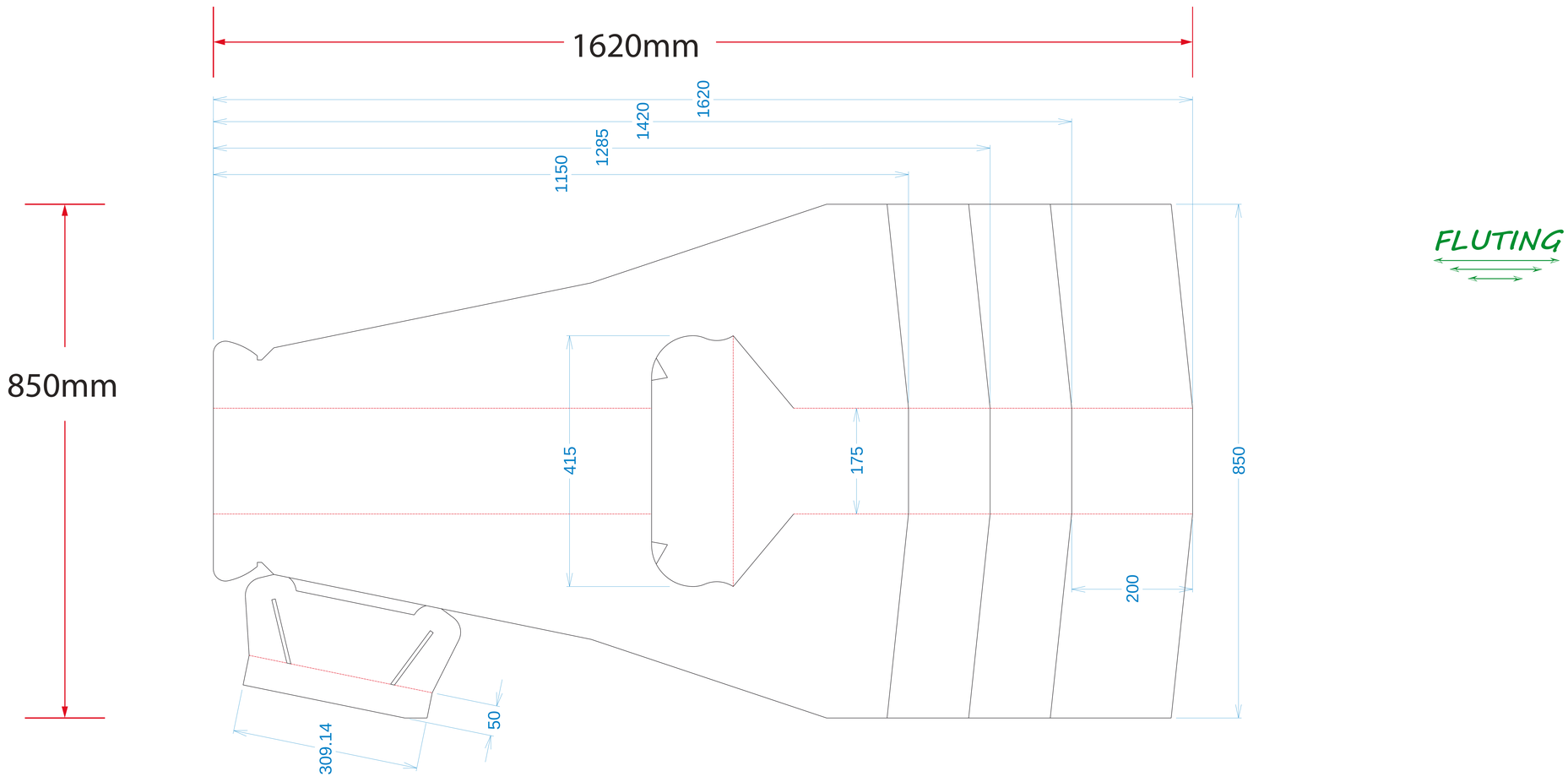

PRINT SIDE

quote drawing only do not use for sample or production

CRAFTECH

SCREEN ▪ DIGITAL ▪ DISPLAY

CLIENT: CRAFTECH		BOARD GRADE: 3mm	
DESCRIPTION: CRFTSTRUT0010_2piece_1150_1620mm		CUT RULE: CUT RULE mm	
JOB NUMBER: JOB NUMBER	DATE: 00/00/2000	CREASE RULE: CREASE RULE mmm	

PRINT REQUIREMENTS
DIGITAL
SCREEN
1,2,3,4 COLOUR
SPECIALS
PMS

CUT LINE
MITER LINE
CREASE LINE
GLUE

CUTTING TIME

CRFTSTRUT0005_1300mm

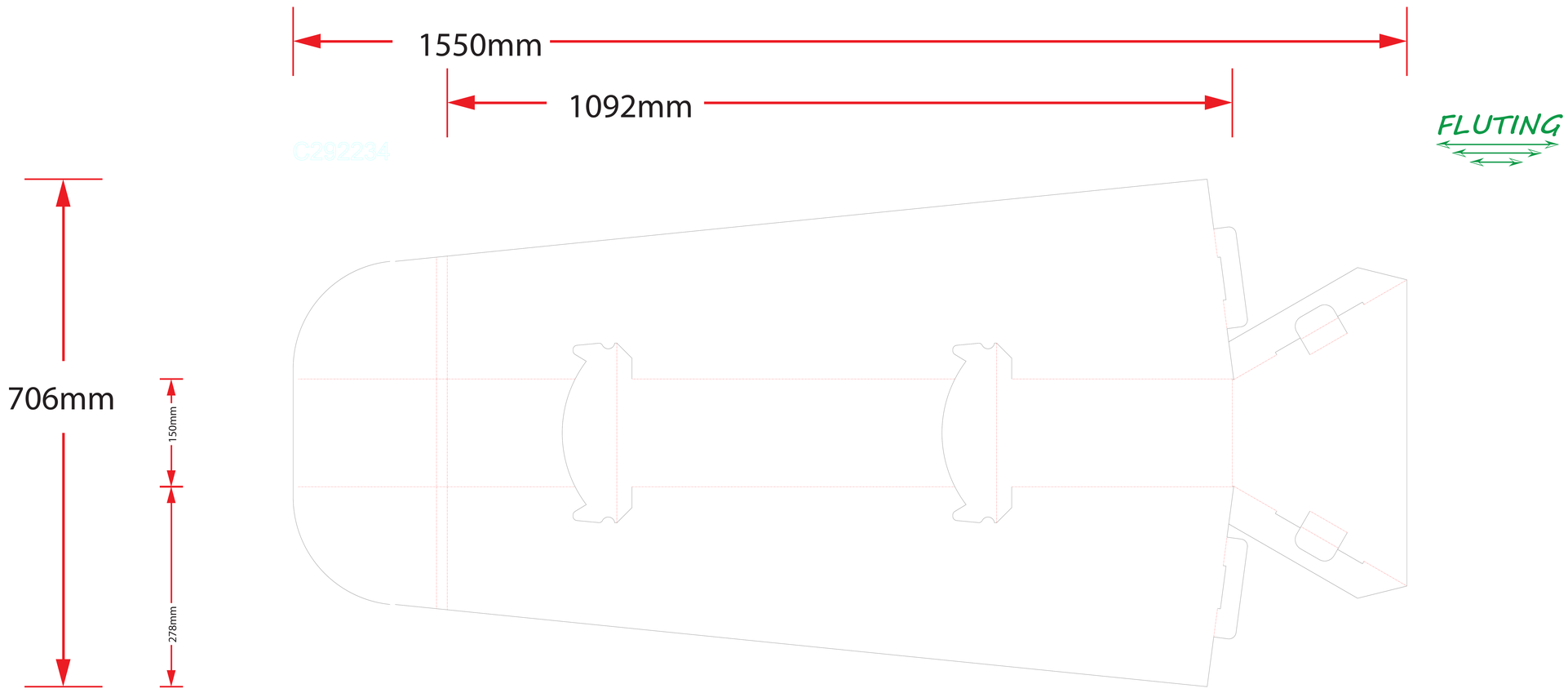

PRINT SIDE

quote drawing only do not use for sample or production

CRAFTECH

SCREEN ▪ DIGITAL ▪ DISPLAY

CLIENT: CRAFTECH		BOARD GRADE: 3mm	
DESCRIPTION: CRFTSTRUT0005_1300mm		CUT RULE: CUT RULE mm	
JOB NUMBER: JOB NUMBER	DATE: 00/00/2000	CREASE RULE: CREASE RULE mmm	

PRINT REQUIREMENTS
DIGITAL
SCREEN
1,2,3,4 COLOUR
SPECIALS
PMS

CUT LINE
MITER LINE
CREASE LINE
GLUE

CUTTING TIME

CRFTSTRUT0003_1600mm

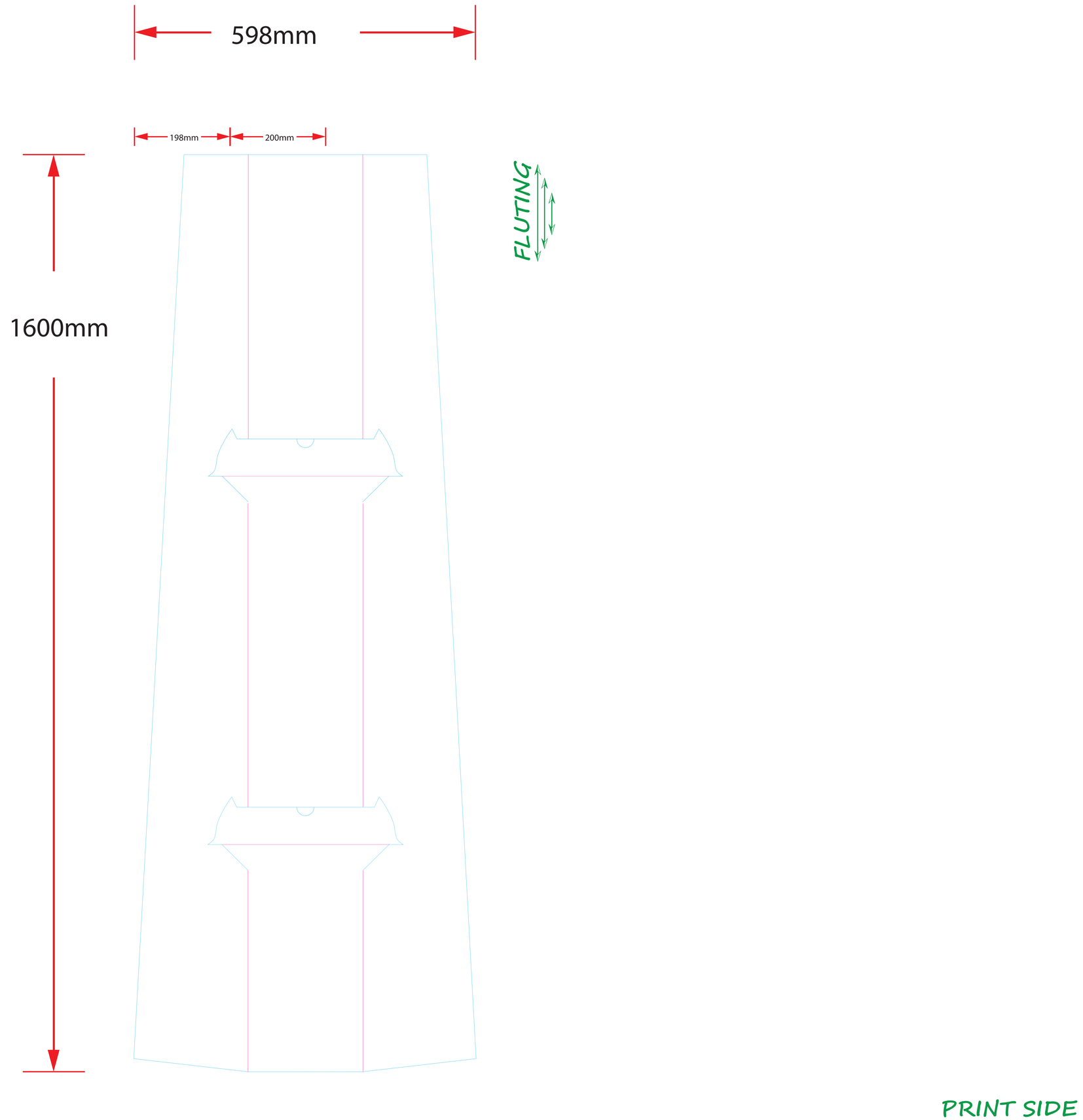

quote drawing only do not use for sample or production

CRAFTECH

SCREEN ▪ DIGITAL ▪ DISPLAY

CLIENT: CRAFTECH		BOARD GRADE: BOARD GRADE	
DESCRIPTION: CRFTSTRUT0003_1600mm		CUT RULE: CUT RULE mm	
JOB NUMBER: JOB NUMBER	DATE: 00/00/2000	CREASE RULE: CREASE RULE mmm	

PRINT REQUIREMENTS
DIGITAL
SCREEN
1,2,3,4 COLOUR
SPECIALS
PMS

CUT LINE
MITER LINE
CREASE LINE
GLUE

CUTTING TIME

CRFTSTRUT0006_1600mm
centre crease

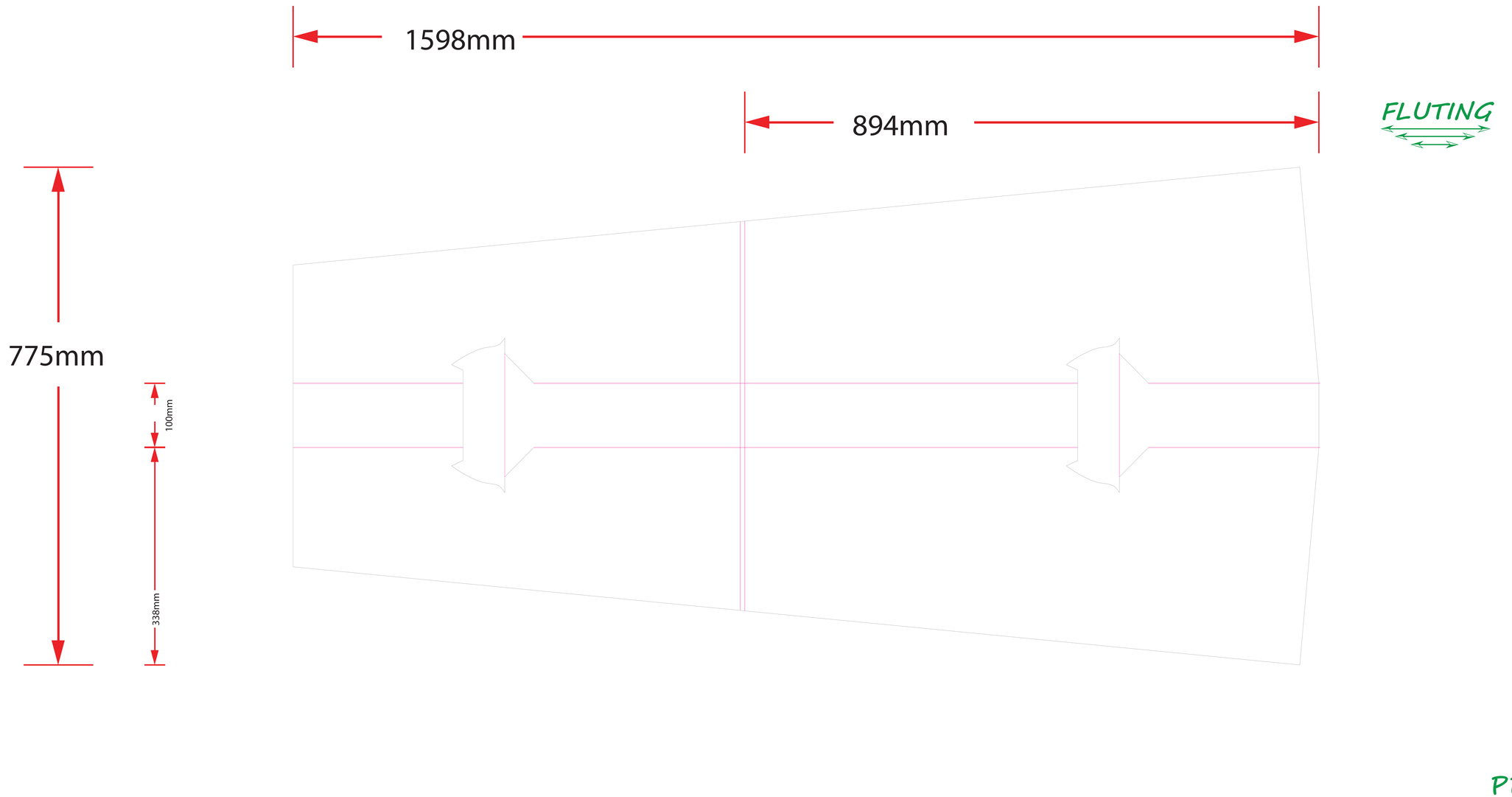

quote drawing only do not use for sample or production

CRAFTECH
SCREEN ▪ DIGITAL ▪ DISPLAY

CLIENT: CRAFTECH		BOARD GRADE: 3mm	
DESCRIPTION: CRFTSTRUT0006_1600mm		CUT RULE: CUT RULE mm	
JOB NUMBER: JOB NUMBER	DATE: 00/00/2000	CREASE RULE: CREASE RULE mmm	

PRINT REQUIREMENTS
DIGITAL
SCREEN
1,2,3,4 COLOUR
SPECIALS
PMS

CUT LINE
MITER LINE
CREASE LINE
GLUE

CUTTING TIME

STANDEE - 1215mm x1830mm With Strut

quote drawing only, do not use for sample or production

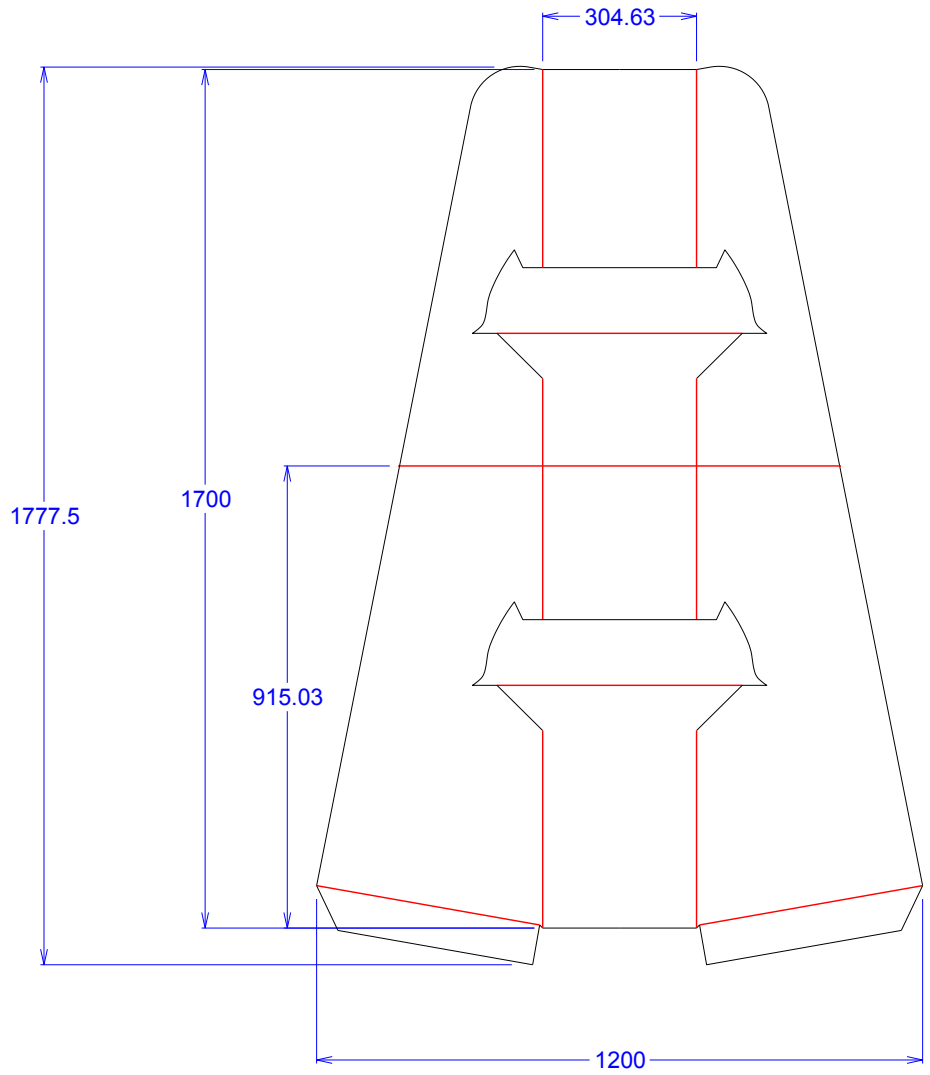

PRINT SIDE UP

FLUTE DIRECTION

COPYRIGHT CRAFTECH Pty Ltd Copyright of this design (including without limitation, design, text, images, logos, icons) is owned or licensed by CRAFTECH Pty Ltd

CRAFTECH
SCREEN • DIGITAL • DISPLAY

CLIENT: Planet Press Pty Ltd	BOARD GRADE: X BOARD 16mm	PRINT REQUIREMENTS: TBA	CUT LINE / MITER LINE / CREASE LINE / GLUE	CUTTING TIME: 2.04 Minutes
DESCRIPTION: STANDEE - 1215mm x1830mm With Strut	CUT RULE: 5.59mtrs			
KNIFE FILE NAME: CRFTSTRUT0013_1700mm / DATE: 23/08/11	CREASE RULE: 4.82mtrs			

STANDEE - 1215mm x1830mm With Strut

quote drawing only, do not use for sample or production

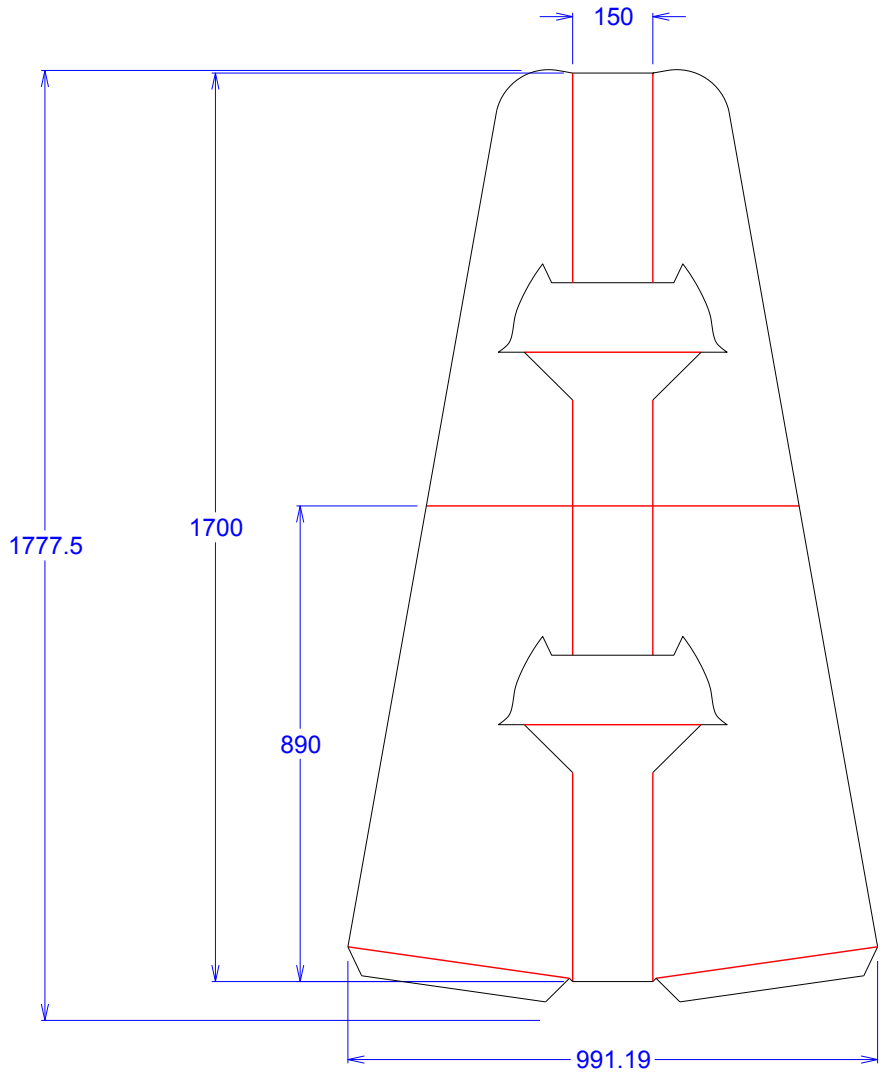

PRINT SIDE UP

FLUTE DIRECTION

COPYRIGHT CRAFTECH Pty Ltd Copyright of this design (including without limitation, design, text, images, logos, icons) is owned or licensed by CRAFTECH Pty Ltd

CRAFTECH
SCREEN • DIGITAL • DISPLAY

CLIENT: Planet Press Pty Ltd	BOARD GRADE: X BOARD 16mm	PRINT REQUIREMENTS	CUT LINE / GLUE / MITER LINE / CREASE LINE	CUTTING TIME: 2.27 Minutes
DESCRIPTION: STANDEE - 1215mm x1830mm With Strut	CUT RULE: 6.87mtrs			
KNIFE REFERENCE: 150w / DATE: 23/08/11	CREASE RULE: 4.72mtrs	TBA		

CRAFTSTRUT0015_1700mm

STANDEE - 1215mm x1830mm With Strut

quote drawing only, do not use for sample or production

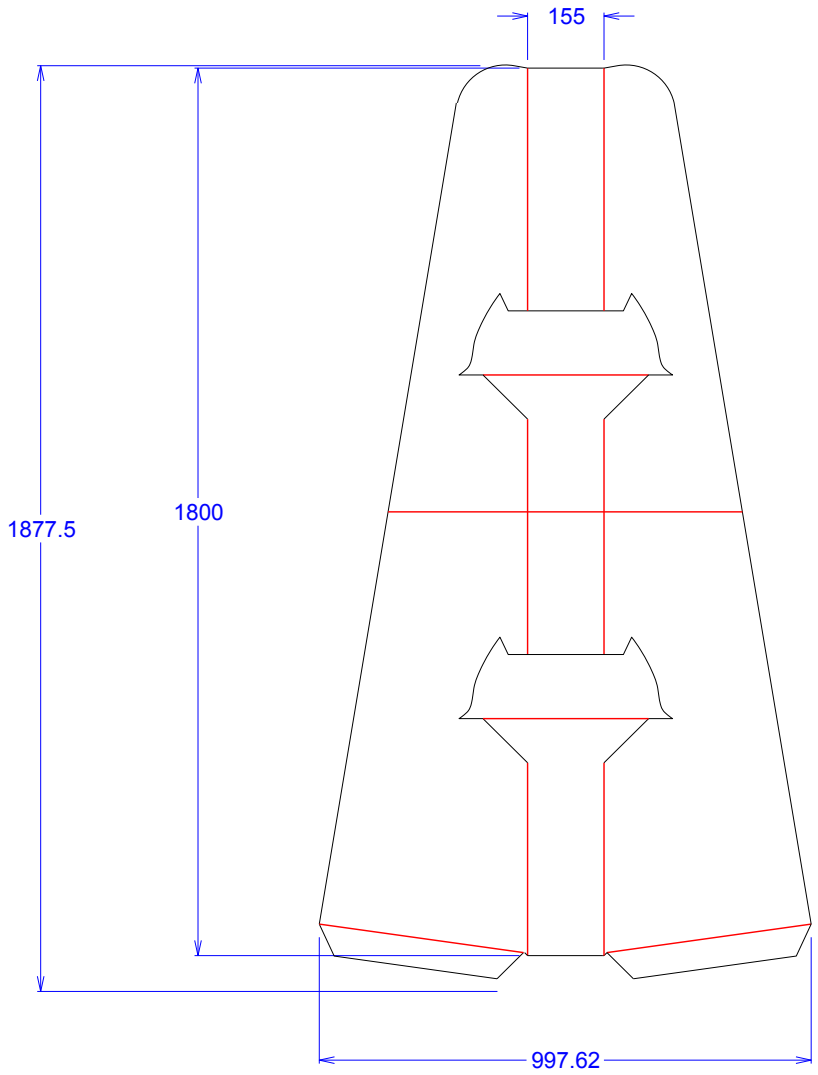

PRINT SIDE UP

FLUTE DIRECTION

COPYRIGHT CRAFTECH Pty Ltd Copyright of this design (including without limitation, design, text, images, logos, icons) is owned or licensed by CRAFTECH Pty Ltd

CRAFTECH
SCREEN • DIGITAL • DISPLAY

CLIENT: Planet Press Pty Ltd	BOARD GRADE: X BOARD 16mm	PRINT REQUIREMENTS: TBA	CUT LINE / MITER LINE / CREASE LINE / GLUE	CUTTING TIME: 2.36 Minutes
DESCRIPTION: STANDEE - 1215mm x1830mm With Strut	CUT RULE: 7.11mtrs			
KNIFE FILE NAME: CRFTSTRUT0013_1800MM / DATE: 23/08/11	CREASE RULE: 4.95mtrs			

quote drawing only, do not use for sample or production

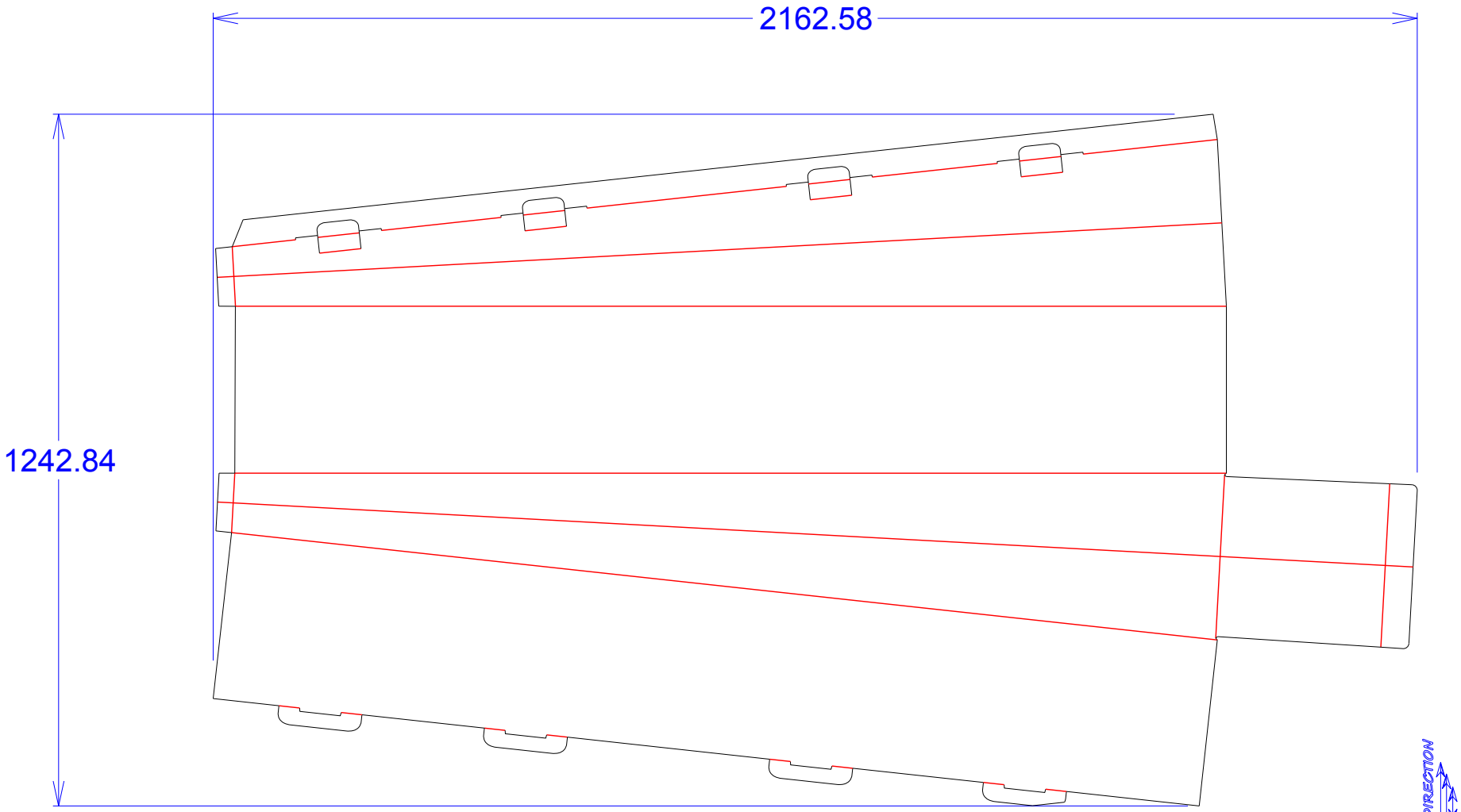

PRINT SIDE UP

COPYRIGHT CRAFTECH Pty Ltd Copyright of this design (including without limitation, design, text, images, logos, icons) is owned or licensed by CRAFTECH Pty Ltd

CRAFTECH
SCREEN • DIGITAL • DISPLAY

CLIENT	BOARD GRADE M-26/125 B Kraft	PRINT REQUIREMENTS	CUT LINE / GLUE / MITER LINE / CREASE LINE	CUTTING TIME 3.93 Minutes
DESCRIPTION	CUT RULE 7.89mtrs			
KNIFE FILE NAME CRFTSTRUT0011_1900mm / DATE 30/06/11	CREASE RULE 12.16mtrs	TBA		

2000mm Strut

quote drawing only, do not use for sample or production

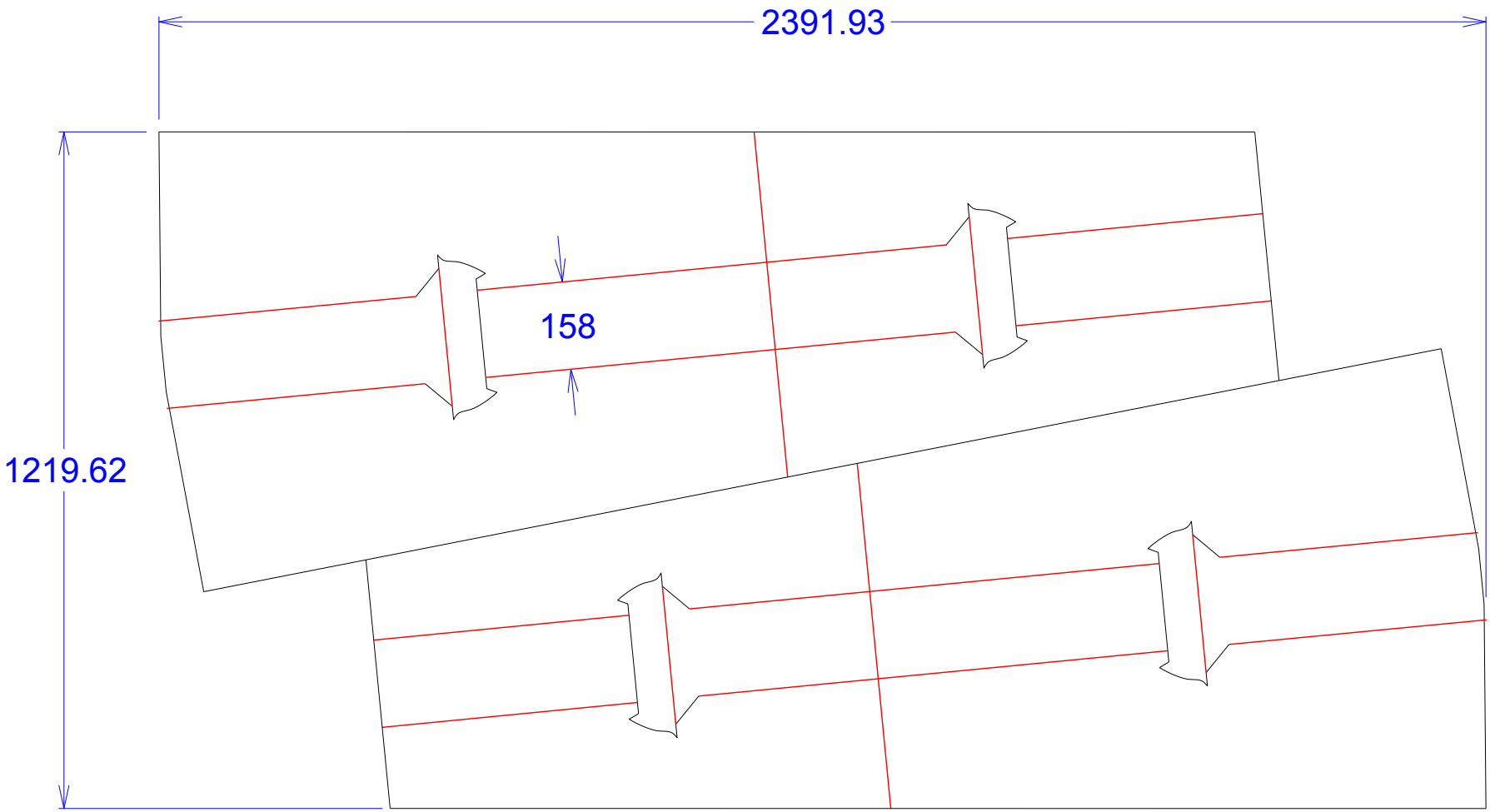

PRINT SIDE UP

FLUTE DIRECTION

COPYRIGHT CRAFTECH Pty Ltd Copyright of this design (including without limitation, design, text, images, logos, icons) is owned or licensed by CRAFTECH Pty Ltd

CRAFTECH
SCREEN • DIGITAL • DISPLAY

CLIENT: CRAFTECH	BOARD GRADE: B Flute	PRINT REQUIREMENTS	CUT LINE / GLUE / MITER LINE / CREASE LINE	CUTTING TIME: 2.82 Minutes
DESCRIPTION: 2000mm Strut	CUT RULE: 4.99mtrs			
KNIFE FILE NAME: CRFTSTRUT0012_2000mmM* / DATE: 04/07/11	CREASE RULE: 9.37mtrs	TBA		